KRAMER

USER MANUAL

MODEL:

VP-428H2
4K HDBT Transmitter/Scaler

Contents

Introduction **1**
Getting Started 1
Overview 2
Functionality 2
Typical Applications 4
Controlling your VP-428H2 4
Defining VP-428H2 4K HDBT Transmitter/Scaler **5**
Connecting VP-428H2 **7**
Connecting to VP-428H2 via RS-232 8
Operating VP-428H2 **9**
Front Panel Buttons 9
OSD Menu 9
Firmware Upgrade **14**
Technical Specifications **15**
Default Communication Parameters 16
Input Resolutions 16
Output Resolutions 17
Protocol 3000 **18**
Understanding Protocol 3000 19
Kramer Protocol 3000 Syntax 20
Protocol 3000 Commands 21

Introduction

Welcome to Kramer Electronics! Since 1981, Kramer Electronics has been providing a world of unique, creative, and affordable solutions to the vast range of problems that confront the video, audio, presentation, and broadcasting professional on a daily basis. In recent years, we have redesigned and upgraded most of our line, making the best even better!

Our 1,000-plus different models now appear in 15 groups that are clearly defined by function: GROUP 1: Distribution Amplifiers; GROUP 2: Switchers and Routers; GROUP 3: Control Systems; GROUP 4: Format & Standards Converters; GROUP 5: Range Extenders & Repeaters; GROUP 6: Specialty AV Products; GROUP 7: Scalers; GROUP 8: Cables and Connectors; GROUP 9: Room Connectivity; GROUP 10: Mounting and Rack Adapters; GROUP 11: Sierra Video; GROUP 12: Digital Signage; GROUP 13: Audio; GROUP 14: Collaboration; and GROUP 15: KM & KVM Switches.

Getting Started

We recommend that you:

- Unpack the equipment carefully and save the original box and packaging materials for possible future shipment.
- Review the contents of this user manual.

Go to www.kramerav.com/downloads/VP-428H2 to check for up-to-date user manuals, application programs, and to check if firmware upgrades are available (where appropriate).

Achieving the Best Performance

- Use only good quality connection cables (we recommend Kramer high-performance, high-resolution cables) to avoid interference, deterioration in signal quality due to poor matching, and elevated noise levels (often associated with low quality cables).
- Do not secure the cables in tight bundles or roll the slack into tight coils.
- Avoid interference from neighbouring electrical appliances that may adversely influence signal quality.
- Position your Kramer **VP-428H2** away from moisture, excessive sunlight and dust.

This equipment is to be used only inside a building. It may only be connected to other equipment that is installed inside a building.

Safety Instructions

Caution: There are no operator serviceable parts inside the unit.

Warning: Use only the Kramer Electronics power supply that is provided with the unit.

Warning: Disconnect the power and unplug the unit from the wall before installing.

Recycling Kramer Products

The Waste Electrical and Electronic Equipment (WEEE) Directive 2002/96/EC aims to reduce the amount of WEEE sent for disposal to landfill or incineration by requiring it to be collected and recycled. To comply with the WEEE Directive, Kramer Electronics has made arrangements with the European Advanced Recycling Network (EARN) and will cover any costs of treatment, recycling and recovery of waste Kramer Electronics branded equipment on arrival at the EARN facility. For details of Kramer's recycling arrangements in your particular country go to our recycling pages at www.kramerav.com/support/recycling.

Overview

Congratulations on purchasing your Kramer **VP-428H2 4K HDBT Transmitter/Scaler**.

VP-428H2 is an HDBaseT 4K transmitter/scaler with HDMI, DP and VGA inputs. **VP-428H2** supports HDBT tunneling of Ethernet, bidirectional RS-232 and IR signals, as well as PoE to provide power to the HDBaseT receiver. It receives the selected AV signal, up-scales, down-scales or bypasses the video, according to the settings selected by the user, and converts it for sending via HDBaseT, together with the tunneled data and PoE.

VP-428H2 is housed in a compact, Kramer MegaTOOL™ enclosure which can be mounted side by side in a 19-inch rack using the **RK-T2B** rack adapter.

VP-428H2 provides exceptional quality, advanced and user-friendly operation, and flexible control.

Functionality

- Supports scaling to / from all input and output resolutions.
- Works with any HDBT receiver (supports 4K without the need for a specialized receiver).
- Upscales to all popular 4K resolutions (to 4K60 4:2:0 max).
- Downscales from 4K60 4:4:4 to all resolutions.
- Automatically downscales 6G 4K color space to 4:2:0.
- 4K resolution bypass option, supporting HDR.
- HDBT tunnelling of RS-232, IR and Ethernet.

Exceptional Quality

- PixPerfect™ Scaling Technology – Kramer's precision pixel mapping and high quality scaling technology.
- Output resolutions – with selectable refresh rates up to 4K/UHD.
- System Range – For the HDBaseT output, extended reach of up to 100m (330ft) using Kramer recommended cables.
- Includes numerous filters and algorithms for eliminating picture artifacts.
- HDCP 2.2, HDMI 2.0/1.4 compliance.
- HDBaseT certified.

Advanced and User-friendly Operation

- Built-in video Proc-Amp – color, hue, sharpness, contrast, and brightness are set individually for each input.
- An OSD (On-Screen Display) – for making adjustments – that can be located anywhere on the screen.
- Advanced EDID management per input.
- Constant Sync – Maintains sync on the output, even if input video signal is lost or interrupted.
- Audio – Unbalanced stereo and embedded audio inputs.
- Audio delay selection.
- MENU and navigation buttons for using OSD.
- Front-panel push-button for input selection.
- STEP-IN button for Step-in control when connected to a device that provides step-in support.
- Firmware Upgrade – Via USB-A port, using a user-friendly software upgrade tool.
- Auto-switching – Selectable last connected and auto-scanning of inputs.
- Non-volatile memory that retains the last settings, after switching the power off and then on again.

Flexible Connectivity

- A FREEZE button, RESET TO XGA/1080P buttons (to hardware-reset the output resolution); and a STEP-IN button.
- 3 video input ports – DP, HDMI and PC.
- Ethernet tunnelling via HDBT.
- Analog stereo audio input.
- Embedded audio on the HDMI and DisplayPort inputs and outputs.
- Scaled HDBT output.
- IR input and output ports.
- Data and device control RS-232 ports.

Typical Applications

VP-428H2 is ideal for the following typical applications:

- Educational – Classrooms, lecture theaters.
- Projection systems in conference rooms, boardrooms, hotels and churches.
- Home theatre up-scaling.

Controlling your VP-428H2

Control your **VP-428H2** directly via the front panel push buttons (see Front Panel Buttons on page 9), with on-screen menus (OSD Menu on page 9), or:

- By RS-232 serial commands transmitted by a touch screen system, PC, or other serial controller (see Connecting to VP-428H2 via RS-232 on page 8).

Defining VP-428H2 4K HDBT Transmitter/Scaler

This section defines **VP-428H2**.

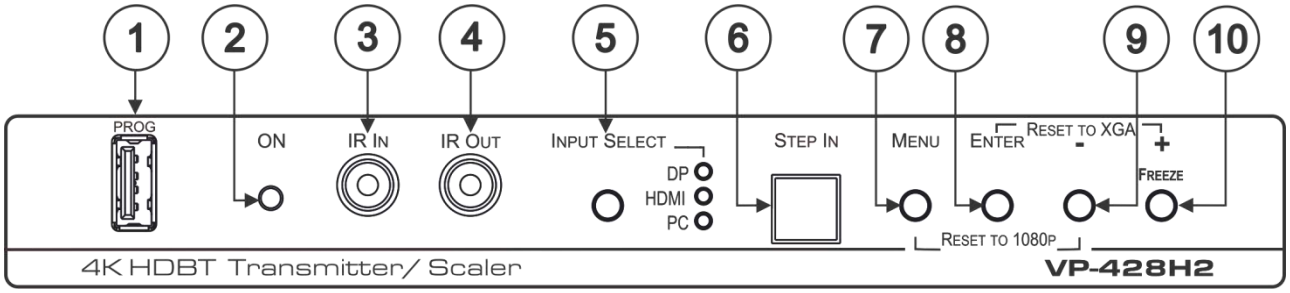

Figure 1: VP-428H2 4K HDBT Transmitter/Scaler Front Panel

#	Feature	Function
1	PROG USB Connector	Connects to a USB memory stick for programming upgrade.
2	ON LED	Lights green when the unit is powered on.
3	IR IN 3.5mm Mini Jack	Connects to an IR sensor.
4	IR OUT 3.5mm Mini Jack	Connects to an IR emitter.
5	INPUT SELECT Button	Press to cycle between inputs.
	INPUT SELECT LEDs	The selected input lights.
6	STEP IN Button	Press to activate the input on the switcher to which the **VP-428H2** is connected.
7	MENU Button	Press to enter/exit the on-screen display (OSD) menu. Press together with the – button to reset to 1080p.
8	ENTER Button	In OSD, press to choose the highlighted menu item. Press together with the +/FREEZE button to reset to XGA.
9	– Button	In OSD, press to move back through the list or to decrement the parameter value.
10	+/FREEZE Button	In OSD, press to move forward through the list or to increment the parameter value. When not in OSD, press to freeze the display.

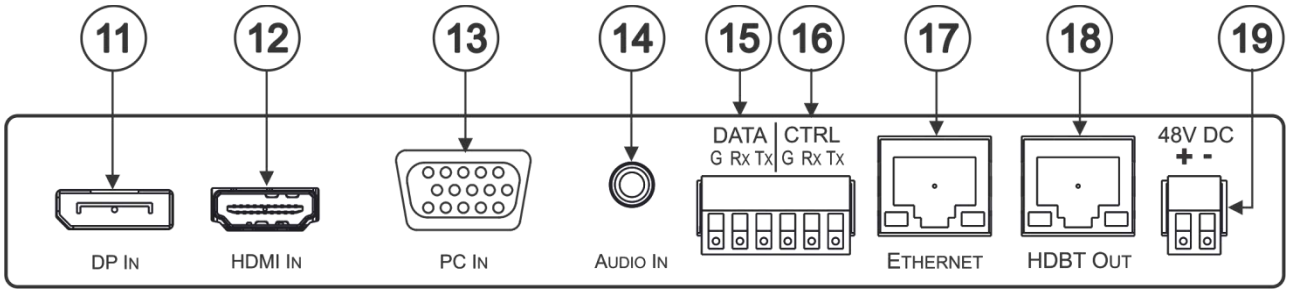

Figure 2: VP-428H2 4K HDBT Transmitter/Scaler Rear Panel

#	Feature	Function
11	DP IN DisplayPort Connector	Connect to a DisplayPort source.
12	HDMI IN Connector	Connect to an HDMI source.
13	PC IN 15-pin HD Connector	Connect to a computer graphics source.
14	AUDIO IN 3.5mm Mini Jack	Connects to an unbalanced stereo audio source.
15	DATA (G, Rx, Tx)Terminal Block Connectors	Connect to a source for tunneling control commands via HDBaseT.
16	CTRL (G, Rx, Tx)Terminal Block Connectors	Connect to a PC or remote controller to control **VP-428H2**.
17	ETHERNET RJ-45 Connector	Connect to a PC via a LAN to tunnel Ethernet data via HDBT.
18	HDBT OUT RJ-45 Connector	Connect to an HDBaseT receiver.
19	48V DC Power Terminal Block Connector	Connect to the Kramer power adapter.

Connecting VP-428H2

Always switch off the power to each device before connecting it to your **VP-428H2**. After connecting your **VP-428H2**, connect its power and then switch on the power to each device.

To connect VP-428H2 as illustrated in the example in Figure 3:

1. Connect a DP source (for example, a laptop) to the DP IN DisplayPort connector (11).
2. Connect an HDMI source (for example, a Blu-ray player) to the HDMI IN connector (12).
3. Connect a computer graphics source (for example, a laptop) to the PC IN 15-pin HD connector (13).
4. Connect an analog stereo audio source (for example, from the laptop) to the AUDIO IN 3.5mm mini jack (14).
5. Connect the HDBT OUT RJ-45 port (18) to a receiver (for example, the Kramer **TP-580Rxr**).
6. Connect an IR sensor to the IR IN 3.5mm mini jack (3) (for example, to control the projector connected to the HDBT receiver that is connected to HDBT OUT (18)).
   The projector IR remote control transmitter sends commands to the projector via the IR sensor.
7. Connect the IR IN 3.5mm mini jack to an IR emitter (for example, to control the HDMI-connected Blu-ray player via the HDBT receiver that is connected to HDBT OUT (18)).
8. Connect a control system to the CTRL (G, Rx, Tx) terminal block connectors (16) to control **VP-428H2**.
9. Connect a control system to the DATA (G, Rx, Tx) terminal block connectors (15) to tunnel control commands via HDBT OUT.
10. Connect the RJ-45 Ethernet port (17) to tunnel Ethernet data via HDBT OUT.
11. Connect the 48V power adapter (19) and connect the adapter to the mains.

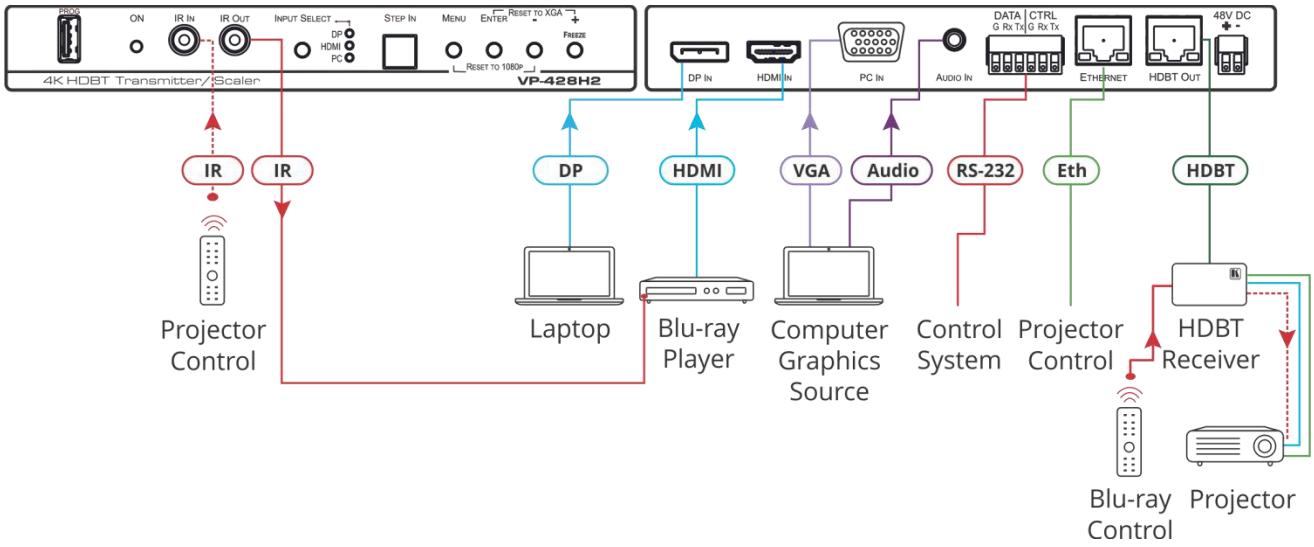

Figure 3: Connecting to the VP-428H2

Connecting to VP-428H2 via RS-232

You can connect to the **VP-428H2** via an RS-232 connection (15, 16) using, for example, a PC.

To connect to the **VP-428H2** via RS-232 Connect the RS-232 rear panel port on the **VP-428H2** unit to the RS-232 port on your PC.

Operating VP-428H2

Operate **VP-428H2** via:

- Front Panel Buttons on page 9.
- OSD Menu on page 9.

Front Panel Buttons

Use **VP-428H2** front panel buttons to perform the following operations:

- Press **MENU** (7), **ENTER** (8), **+** (10) and **–** (9) to use the OSD menu.
- Press **MENU** and **–** simultaneously to reset the resolution to 1080p (RESET TO 1080p).
- Press **ENTER** and **FREEZE** (10) simultaneously to reset the resolution to XGA (RESET TO XGA).
- Press **INPUT SELECT** (5) to manually select the input to switch to the output.
- Press **STEP-IN** (6) to activate the input on a Step-in compatible device, see Using the Step-in Feature on page 13.

OSD Menu

The control buttons let you control the **VP-428H2** via the OSD menu. Press:

- **MENU** to enter the menu.
  The default timeout is set to 10 seconds.
- **ENTER** button to accept changes and to change the menu settings.
- **+** and **–** to move through the OSD menu, which is displayed on the video output.

On the OSD menu, select **EXIT** to exit the menu.

The OSD menu enables performing the following:

- Setting Image Parameters on page 10.
- Selecting the Input Signal on page 10.
- Setting Output Parameters on page 11.
- Setting the Audio Source on page 11.
- Setting OSD Parameters on page 12.
- Defining Advanced Settings on page 12.
- Performing Factory Reset on page 13.
- Viewing Device Information on page 13.

Setting Image Parameters

To set the image parameters:

1. On the front panel click **MENU**. The menu appears.
2. Click **PICTURE** and set the following:

Menu Item	Function	
CONTRAST	Set the contrast (the range and default values vary according to the input signal).	
BRIGHTNESS	Set the brightness (the range and default values vary according to the input signal).	
FINETUNE	**Input Signal**	**Function**
	HDMI/DP	HUE – set the color hue.
		SATURATION – set the color saturation.
		SHARPNESS – set the sharpness of the picture.
		NOISE REDUCTION – select the noise reduction: OFF (default), LOW, MIDDLE, HIGH or AUTO.
	VGA	PHASE – set the phase.
		CLOCK – set the clock.
		H-POSITION – set the horizontal position.
		V-POSITION – set the vertical position.
COLOR	Set the RED, GREEN and BLUE shades.	

Selecting the Input Signal

To set the input source:

1. On the front panel click **MENU**. The menu appears.
2. Click **INPUT** and set select the input source: DP, HDMI or PC (default).

Setting Output Parameters

To set the output parameters:

1. On the front panel click **MENU**. The menu appears.
2. Click **PICTURE** and set the following:

Menu Item	Function			
SIZE	Set the size of the image: FULL, OVER SCAN, UNDERSCAN, LETTER BOX, PAN SCAN or BEST FIT.			
4K in -> 4K out	Select SCALER to process the 4K-in to 4K-out signal via the scaler. Select BYPASS to bypass the scaler.			
RESOLUTION	Select the output resolution:			
	Appears as	**Output Resolution**	**Appears as**	**Output Resolution**
	720X480P	480p	640x480	640x480
	720X576P	576p	800x600	800x600
	1280X720P50	720p@50Hz	1024x768	1024x768
	1280X720P60	720p@60Hz	1280x768	1280x768
	1920X1080P24	1080p@24Hz	1360x768	1360x768
	1920X1080P25	1080p@25Hz	1280x720	1280x720
	1920X1080P30	1080p@30Hz	1280x800	1280x800
	1920X1080P50	1080p@50Hz	1280x1024	1280x1024
	1920X1080P60	1080p@60Hz	1440x900	1440x900
	4K2K 24	4K2K@24Hz	1400x1050	1400x1050
	4K2K 25	4K2K@25Hz	1920X1080	1920X1080
	4K2K 30	4K2K@30Hz	1680x1050	1680x1050
	4K2K(420) 50	4K2K@50Hz(4:2:0)	1600x1200	1600x1200
	4K2K(420) 60	4K2K@60Hz(4:2:0)	1920x1200 RB	1920x1200 RB

Setting the Audio Source

To set the audio source:

1. On the front panel click **MENU**. The menu appears.
2. Click **AUDIO** and set the following:

Menu Item	Function
DP SOURCE	Set to ANALOG, EMBEDDED (default) or AUTOMATIC.
HDMI SOURCE	Set to ANALOG, EMBEDDED (default) or AUTOMATIC.
DELAY	Set the audio delay time to OFF (default), 40ms, 50ms, up to 200ms (in 10ms steps).

Setting OSD Parameters

To set the OSD parameters:

1. On the front panel click **MENU**. The menu appears.
2. Click **OSD** and set the following:

Menu Item	Function
H POSITION	Set the horizontal position of the OSD.
V POSITION	Set the vertical position of the OSD.
TIMER	Set the timeout period in seconds.
TRANSPARENCY	Set the OSD background between 100 (transparent) and 0 (opaque).
DISPLAY	Select the information displayed on-screen during operation: INFO (default) – the information appears for 10 seconds. ON – the information appears constantly. OFF – the information does not appear.

Defining Advanced Settings

To set the advanced settings:

1. On the front panel click **MENU**. The menu appears.
2. Click **ADVANCED** and set the following:

Menu Item	Function
HDCP ON INPUT:	Set HDCP on DP and HDMI: either ON (default) or OFF. Setting HDCP support to enabled (ON) or disabled (OFF) on the input allows the source to transmit a non-HDCP signal if required (for example, when working with a Mac computer).
HDCP ON OUTPUT:	Select FOLLOW INPUT, to change its HDCP output setting according to the HDCP of the input. This option is recommended when the HDMI/HDCP output is connected to a splitter/switcher. Select FOLLOW OUTPUT for the scaler to match its HDCP output to the HDCP setting of the HDMI/HDCP acceptor to which it is connected.
AUTO SYNC OFF:	Turns off the output after a period of not detecting a valid video signal on the input(s) until a valid input is again detected or any keypad is pressed. Set to: Slow – to disable outputs after 2 minutes. Fast – to disable outputs after 10 seconds. Disable – to leave outputs active at all times.
AUTO INPUT:	Set to: OFF (default) – for manual switching. Last Connected – switches to the last connected input. Scan – scans for a valid input.
AUTO IMAGE:	When ON, auto image is implemented every time the input is switched to VGA or when the input resolution changes. The auto-image feature calculates the positioning based on the picture connected to the VGA input. Only a “full screen” picture can be used for this auto-positioning – a test pattern (or some other picture) which has black along the entire top, bottom or one of the sides would not be suitable).
FREEZE:	Select to freeze and/or mute the display FREEZE ONLY / FREEZE + MUTE (default) / MUTE ONLY.

Menu Item	Function
EDID MANAGE:	Set DP EDID – to DEF. 1080P, DEF. 4K2K(3G), DEF. 4K2K(4:2:0) or OUTPUT. Set HDMI EDID – to DEF. 1080P, DEF. 4K2K(3G), DEF. 4K2K(4:2:0) or OUTPUT.
HDBT DATA:	**VP-428H2** can either pass data via HDBT OUT or use the Step-in feature (see Using the Step-in Feature on page 13). Set to: DATA PORT (default) – to enable passing data via HDBT OUT. STEP-IN 0 – to use Step-in with legacy Step-in-compatible switchers. STEP-IN 4 – to use with new Step-in-compatible switchers.

Using the Step-in Feature

When the **VP-428H2** HDBT OUT port is connected to a Step-in compatible switcher via the HDBT OUT port (for example, **VP-558**), you can use the Step-in button to activate the input on that switcher.

To use the Step-in feature first perform the initial setup and then perform a Step-in operation.

To use the Step-in feature:

1. Perform the initial setup:
   - On the front panel press **MENU**. The menu appears.
   - Click **ADVANCED** and then **HDBT DATA**.
   - Select STEP-IN 0 (legacy) or STEP-IN 4 (new).

The Step-in button on the front panel now operates in conjunction with the compatible receiver.

2. Perform a Step-in operation:
   - On the front panel click **INPUT SELECT** to select an input.
3. Press **STEP-IN** to switch the selected input to the connected switcher.

Performing Factory Reset

To perform factory reset:

1. On the front panel click **MENU**. The menu appears.
2. Click **FACTORY** and click **YES**.
   Wait for completion of factory reset.

Viewing Device Information

To view the information:

1. On the front panel click **MENU**. The menu appears.
2. Click **INFO.** and view the following information: the selected source, the input and output resolutions, Valens firmware version and software version.

Firmware Upgrade

To upgrade the firmware:

1. Save the new firmware file to a memory stick.
2. Disconnect power from the **VP-428H2**.
3. Plug the memory stick into the PROG USB port on the **VP-428H2** front panel.
4. Press and hold the MENU button while reconnecting power to the **VP-428H2**.
5. When the ON LED flashes, release the MENU button (meaning the device is in the FW upgrading mode).
6. When the upgrade is complete, the LED stops flashing and illuminates.
7. Disconnect and reconnect the power cable.
8. Check that the **INFO.** screen shows the latest FW version (see Viewing Device Information on page 13).

Technical Specifications

Inputs	1 DP	On a DisplayPort connector
	1 HDMI	On a female HDMI connector
	1 PC	On a 15-pin HD connector
	1 Stereo Analog Unbalanced Audio	On a 3.5mm mini jack
	1 IR IN	On a 3.5mm mini jack
Outputs	HDBT OUT	On an RJ-45 port
	1 IR OUT	On a 3.5mm mini jack
Ports	1 USB	On a female USB-A connector
	1 DATA RS-232	On a 3-pin terminal block for serial link extension
	1 CTRL RS-232	On a 3-pin terminal block for device control
	1 Ethernet	On an RJ-45 female connector for port tunneling
Video	Max Bandwidth	10.2Gbps (3.4Gbps per graphic channel)
	Max Resolution	4K UHD @60Hz (4:2:0) 24bpp resolution
	Compliance	HDMI 2.0 and HDCP 2.2
	Switching Time Between Inputs	2 to 3 seconds
	Video Latency	2 to 3 frames
Input Resolutions	640x350@60/70/85Hz, 640x400@70/85Hz, 640x480@57/60/66/72/85Hz, 720x400@70/85Hz, 720x480@60i/60p/60Hz, 720x576@50i/50p/60Hz, 800x600@56/60/72/75/85Hz, 832x624@75Hz, 848x480@59/60Hz, 864X648@60Hz, 1024x768@43i/60/70/75/85Hz, 1152x864@60/70/75/85Hz, 1152x870@60/75Hz, 1280x720@25p/30p/50p/60p/75Hz, 1280x768@50/60 (RB)/60/75/85Hz, 1280x800@59/60/75/85Hz, 1280x960@60/75/85Hz, 1280x1024@59/60/72/75/76/85Hz, 1360x768@60Hz, 1366x768@60Hz, 1400x1050@59/60/75Hz, 1440x900@60 (RB)/60/75/85Hz, 1600x900@60 (RB)/60/75Hz, 1600x1024@60/75Hz, 1600x1200@51/59/60/65/70/75Hz, 1680x1050@59/60/75Hz, 1920x1200@59/60/65/75Hz, 1920x1080@50i/60i/24p/25p/30p/50p/60p/60Hz, 920X1080@60s, 1920X1080@50vesa, 3840x2160@24p/25p/30p/50p/50p (420)/60p/60p (420)/60p (RB), 4096x2160@24p/25p/30p/50p/50p (420)/60p/60p (420)	
Output Resolutions	Native, 640x480@60Hz, 720x480P@60Hz, 720x576P@50Hz, 800x600@60Hz, 1024x768@60Hz, 1280x720@60Hz, 1280x768@60Hz, 1280x800@60Hz, 1280x1024@60Hz, 1360x768@60Hz, 1400x1050@60Hz, 1440x900@60Hz, 1600x1200@60Hz, 1680x1050@60Hz, 1920x1080@60Hz, 1920x1200@60Hz, 1280x720P@50/60Hz, 1920x1080P@24/25/30/50/60Hz, 4K@24/25/30Hz, 4K2K(4:2:0)@50/60Hz	
Power	Consumption	48V DC, 410mA
	Source	48V DC, 1.36A
Environmental Conditions	Operating Temperature	0° to +40°C (32° to 104°F)
	Storage Temperature	-40° to +70°C (-40° to 158°F)
	Humidity	10% to 90%, RHL non-condensing
Regulatory Compliance	Safety	CE, UL
	Environmental	RoHs, WEEE

Enclosure	Size	MegaTOOLS
	Type	Aluminum
	Cooling	Convection Ventilation
General	Net Dimensions (W, D, H)	18.8cm x 22.3cm x 2.5cm (7.4" x 5.7" x 1 ")
	Shipping Dimensions (W, D, H)	21.2cm x 35.1cm x 7.2cm (8.4" x 13.8" x 2.8")
	Net Weight	0.87kg (1.9lbs) approx.
	Shipping Weight	1.43kg (3.1lbs) approx.
Accessories	Included	Power adapter and cord
Specifications are subject to change without notice at www.kramerav.com		

Default Communication Parameters

RS-232	
Baud Rate:	9,600
Data Bits:	8
Stop Bits:	1
Parity:	None
RS-232 Command Protocol	
Command Format:	ASCII protocol 3000
Example (Route the video HDMI input to the output):	#ROUTE 12,1,1<cr>
Full Factory Reset	
OSD	Go to : Menu-> Setup -> Factory Reset -> press Enter to confirm
Front panel buttons	Press the Reset to XGA/1080p Button while plugging the power to reset the machine

Input Resolutions

Resolution/Refresh Rate	DP	PC	HDMI
480I/576I	Yes	No	Yes
480P/576P	Yes	No	Yes
720P@(60/50)	Yes	No	Yes
1080I@(60/50)	Yes	No	Yes
1080P@(60/50)	Yes	No	Yes
1080P@(24/25/30)	Yes	No	Yes
640x480@(60/67/72/75/85)	Yes	Yes	Yes
800x600@(56/60/72/75)	Yes	Yes	Yes
1024x768@(60/70/75)	Yes	Yes	Yes
1280x1024@(60/75)	Yes	Yes	Yes
1280X960@60	Yes	Yes	Yes
1280X720@60	Yes	Yes	Yes
1920X1080@60	Yes	No	Yes
1600X1200@60	Yes	Yes	Yes
1280x768@60	Yes	Yes	Yes
1280x800@60	Yes	Yes	Yes
1360x768@60	Yes	Yes	Yes
1366x768@60	Yes	Yes	Yes

Resolution/Refresh Rate	DP	PC	HDMI
1400x1050@60	Yes	Yes	Yes
1600X900@60 RB	Yes	No	Yes
1680x1050@60	Yes	Yes	Yes
1920x1200@60 RB	Yes	Yes	Yes
4K2K@(24/25/30/50/60)	Yes	No	Yes
4K2K(4:2:0)@(50/60)	Yes	No	Yes

Output Resolutions

Resolution/Refresh Rate	HDBT
640x480 60Hz	Yes
800x600 60Hz	Yes
1024x768 60Hz	Yes
1280x768 60Hz	Yes
1360x768 60Hz	Yes
1280x720 60Hz	Yes
1280x800 60Hz	Yes
1280x1024 60Hz	Yes
1440x900 60Hz	Yes
1400x1050 60Hz	Yes
1680x1050 60Hz	Yes
1920x1080 60Hz	Yes
1920x1200 RB 60Hz	Yes
480P 60Hz	Yes
576P 50Hz	Yes
720P (50/60Hz)	Yes
1080P (24/25/30/50/60Hz)	Yes
4K2K (24/25/30Hz)	Yes
4K2K (4:2:0) (50/60Hz)	Yes

Protocol 3000

The **VP-428H2 4K HDBT Transmitter/Scaler** can be operated using the Kramer Protocol 3000 serial commands. The command framing varies according to how you interface with the **VP-428H2**.

Generally, a basic video input switching command that routes a layer 1 video signal to HDMI out 1 from HDMI input 2 (`ROUTE 1,1,2`), is entered as follows:

- Terminal communication software, such as Hercules:

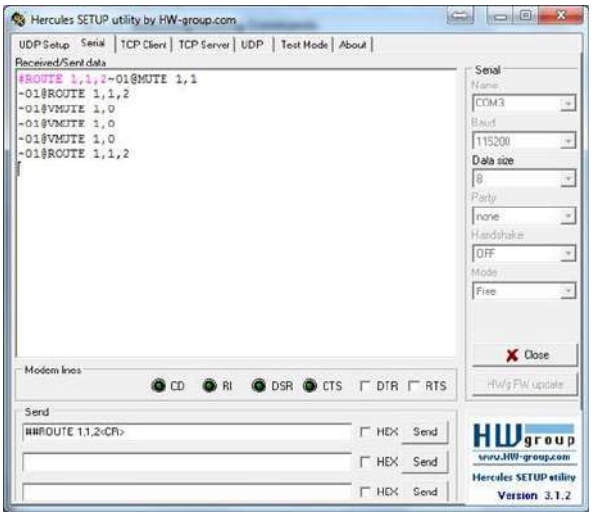

The framing of the command varies according to the terminal communication software. .

- K-Touch Builder (Kramer software):

- K-Config (Kramer configuration software):

All the examples provided in this section are based on using the K-Config software.

You can enter commands directly using terminal communication software (e.g., Hercules) by connecting a PC to the serial or Ethernet port on your device. To enter `CR` press the Enter key (`LF` is also sent but is ignored by the command parser).

Commands sent from various non-Kramer controllers (e.g., Crestron) may require special coding for some characters (such as, `/X##`). For more information, refer to your controller's documentation.

For more information about Protocol 3000 commands, see:

- Understanding Protocol 3000 on page 19.
- Kramer Protocol 3000 Syntax on page 20.
- Protocol 3000 Commands on page 21.

Understanding Protocol 3000

Protocol 3000 commands are structured according to the following:

- **Command –** A sequence of ASCII letters (A-Z, a-z and -). A command and its parameters must be separated by at least one space.
- **Parameters –** A sequence of alphanumeric ASCII characters (0-9, A-Z, a-z and some special characters for specific commands). Parameters are separated by commas.
- **Message string –** Every command entered as part of a message string begins with a message starting character and ends with a message closing character.

A string can contain more than one command. Commands are separated by a pipe (`|`) character.

- **Message starting character:**
  - `#` – For host command/query
  - `~` – For device response
- **Device address** – K-NET Device ID followed by `@` (optional, K-NET only)
- **Query sign** – `?` follows some commands to define a query request
- **Message closing character:**
  - `CR` – Carriage return for host messages (ASCII 13)
  - `CR LF` – Carriage return for device messages (ASCII 13) and line-feed (ASCII 10)
- **Command chain separator character –** Multiple commands can be chained in the same string. Each command is delimited by a pipe character (`|`). When chaining commands, enter the message starting character and the message closing character only at the beginning and end of the string.

Spaces between parameters or command terms are ignored. Commands in the string do not execute until the closing character is entered. A separate response is sent for every command in the chain.

Kramer Protocol 3000 Syntax

The Kramer Protocol 3000 syntax uses the following delimiters:

- CR = Carriage return (ASCII 13 = 0x0D)
- LF = Line feed (ASCII 10 = 0x0A)
- SP = Space (ASCII 32 = 0x20)

Some commands have short name syntax in addition to long name syntax to enable faster typing. The response is always in long syntax.

The Protocol 3000 syntax is in the following format:

- Host Message Format:

Start	Address (optional)	Body	Delimiter
#	*Device_id@*	**Message**	CR

- **Simple Command** – Command string with only one command without addressing:

Start	Body	Delimiter
#	**Command** SP *Parameter_1,Parameter_2,…*	CR

- **Command String** – Formal syntax with command concatenation and addressing:

Start	Address	Body	Delimiter
#	*Device_id@*	**Command_1** *Parameter1_1,Parameter1_2,…|* **Command_2** *Parameter2_1,Parameter2_2,…|* **Command_3** *Parameter3_1,Parameter3_2,…|…*	CR

- **Device Message Format**:

Start	Address (optional)	Body	Delimiter
~	*Device_id@*	**Message**	CR LF

- Device Long Response – Echoing command:

Start	Address (optional)	Body	Delimiter
~	*Device_id@*	**Command** SP **[***Param1 ,Param2 …***]** **result**	CR LF

Protocol 3000 Commands

This section includes the following commands:

- Common Commands on page 21.
- Step-in Commands on page 26.
- System Commands on page 27.
- Video Commands on page 28.
- Switching/Routing Commands on page 30.
- Audio Commands on page 31.

Common Commands

Command	Description
#	Protocol handshaking (system mandatory)
BUILD-DATE	Get device build date (system mandatory)
FACTORY	Reset to factory default configuration
HELP	Get command list (system mandatory)
MODEL?	Get device model (system mandatory)
PROT-VER?	Get device protocol version (system mandatory)
RESET	Reset device (system mandatory)
SN?	Get device serial number (system mandatory)
VERSION?	Read device firmware version
DISPLAY	Read if output is valid
NAME	Set/get machine (DNS) name
NAME-RST	Reset machine name to factory default (DNS)

#

Functions		Permission	Transparency
Set:	**#**	End User	Public
Get:	-	-	-
Description		**Syntax**	
Set:	Protocol handshaking	**#**CR	
Get:	-	-	
Response			
~nn@SPOKCR LF			
Notes			
Validates the Protocol 3000 connection and gets the machine number. Step-in master products use this command to identify the availability of a device.			
K-Config Example			
"#",0x0D			

BUILD-DATE

Functions		Permission	Transparency
Set:	-	-	-
Get:	**BUILD-DATE?**	End User	Public
Description		**Syntax**	
Set:	-	-	
Get:	Get device build date	#**BUILD-DATE?**CR	

Response

~nn@**BUILD-DATE**SPdateSPtimeCR LF

Parameters

date – Format: YYYY/MM/DD where YYYY = Year, MM = Month, DD = Day
time – Format: hh:mm:ss where hh = hours, mm = minutes, ss = seconds

K-Config Example

"#BUILD-DATE?",0x0D

FACTORY

Functions		Permission	Transparency
Set:	**FACTORY**	End User	Public
Get:	-	-	-
Description		**Syntax**	
Set:	Reset device to factory default configuration	#**FACTORY**CR	
Get:	-	-	

Response

~nn@**FACTORY**SPOKCR LF

Notes

This command deletes all user data from the device. The deletion can take some time.
Your device may require powering off and powering on for the changes to take effect.

K-Config Example

"#FACTORY",0x0D

HELP

Functions		Permission	Transparency
Set:	-	-	-
Get:	**HELP**	End User	Public
Description		**Syntax**	
Set:	-	-	
Get:	Get command list or help for specific command	#**HELP**CR	

Response

Multi-line: ~nn@Device available protocol 3000 commands:CR LFcommand,SP command...CR LF

Parameters

COMMAND_NAME – name of a specific command

Notes

To get help for a specific command use: **HELP**SPCOMMAND_NAMECR LF

K-Config Example

"#HELP",0x0D

MODEL

Functions		Permission	Transparency
Set:	**-**	-	-
Get:	**MODEL?**	End User	Public
Description		**Syntax**	
Set:	-	-	
Get:	Get device model	#**MODEL?**CR	

Response

~nn@**MODEL**SPmodel_nameCR LF

Parameters

model_name – String of up to 19 printable ASCII chars

Notes

This command identifies equipment connected to Step-in master products and notifies of identity changes to the connected equipment. The Matrix saves this data in memory to answer REMOTE-INFO requests.

K-Config Example

"#MODEL?",0x0D

PROT-VER

Functions		Permission	Transparency
Set:	**-**	-	-
Get:	**PROT-VER?**	End User	Public
Description		**Syntax**	
Set:	-	-	
Get:	Get device protocol version	#**PROT-VER?**CR	

Response

~nn@**PROT-VER**SP3000:versionCR LF

Parameters

version - XX.XX where X is a decimal digit

K-Config Example

"#PROT-VER?",0x0D

RESET

Functions		Permission	Transparency
Set:	**RESET**	Administrator	Public
Get:	**-**	-	-
Description		**Syntax**	
Set:	Reset device	#**RESET**CR	
Get:	-	-	

Response

~nn@**RESET**SPOKCR LF

Notes

To avoid locking the port due to a USB bug in Windows, disconnect USB connections immediately after running this command. If the port was locked, disconnect and reconnect the cable to reopen the port.

K-Config Example

"#RESET",0x0D

SN?

Functions		Permission	Transparency
Set:	–	-	-
Get:	**SN?**	End User	Public
Description		**Syntax**	
Set:	-	-	
Get:	Get device serial number	#**SN?**CR	
Response			
~nn@**SN**SPserial_numberCR LF			
Parameters			
serial_number – 11 decimal digits, factory assigned			
Notes			
This device has a 14 digit serial number, only the last 11 digits are displayed.			
K-Config Example			
"#SN?",0x0D			

VERSION?

Functions		Permission	Transparency
Set:	**-**	-	-
Get:	**VERSION?**	End User	Public
Description		**Syntax**	
Set:	-	-	
Get:	Get firmware version number	#**VERSION?**CR	
Response			
~nn@**VERSION**SPfirmware_versionCR LF			
Parameters			
firmware_version – XX.XX.XXXX where the digit groups are: major.minor.build version			
K-Config Example			
"#VERSION?",0x0D			

DISPLAY

Functions		Permission	Transparency
Set:	-	-	-
Get	DISPLAY?	End User	System
Description		**Syntax**	
Set:	-	-	
Get:	Get output HPD status	#**DISPLAY?**SPP1CR	
Response			
~nn@**DISPLAY**SPP1CR LF			
Parameters			
P1 – Output number: 1 (HDBaseT)			
Response Triggers			
After execution, response is sent to the com port from which the Get was received. Response is sent after every change in output HPD status ON to OFF. Response is sent after every change in output HPD status OFF to ON and ALL parameters (new EDID, etc.) are stable and valid (new EDID, etc.) are stable and valid.			
K-Config Example			
Get the output HPD status of HDMI 1: "#DISPLAY?",0x0D			

NAME

Functions		Permission	Transparency
Set:	**NAME**	Administrator	Public
Get:	**NAME?**	End User	Public
Description		**Syntax**	
Set:	Set machine (DNS) name	#**NAME**SP*machine_name*CR	
Get:	Get machine (DNS) name	#**NAME?**CR	

Response

Set: ~nn@**NAME**SPmachine_nameCR LF
Get: ~nn@**NAME**SPmachine_nameCR LF

Parameters

machine_name – String of up to 14 alpha-numeric characters (can include hyphens but not at the beginning or end)

Notes

The machine name is not the same as the model name. The machine name is used to identify a specific machine or a network in use (with DNS feature on).

K-Config Example

Set the DNS name of the device to “room-442”:
“#NAME room-442”,0x0D

NAME-RST

Functions		Permission	Transparency
Set:	**NAME-RST**	Administrator	Public
Get:	-	-	-
Description		**Syntax**	
Set:	Reset machine (DNS) name to factory default	#**NAME-RST**CR	
Get:	-	-	

Response

~nn@**NAME-RST**SPOKCR LF

Notes

Factory default of machine (DNS) name is “KRAMER_” + 4 last digits of device serial number

K-Config Example

Reset the machine name (S/N last digits are 0102):
“#NAME-RST KRAMER_0102”,0x0D

Step-in Commands

Command	Description
BTN	Set/get module state
STEPIN-CP	Get module STEP-IN capabilities

BTN

Command Name		Permission	Transparency
Set:	**BTN**	User	Public
Get:	**BTN?**	User	Public
Description		**Syntax**	
Set:	Set module state	#**BTN**SPbutton_num,modeCR	
Get:	Get module state	#**BTN?**SPbutton_numCR	

Response

~nn@**BTN**SPbutton_num,modeCR LF

Parameters

button_num – 1 (button number)
mode – 0 (mute), 1 (active) 0xff (pending)

Notes

After a SET command, LEDs show the button status:
mute – button LED off
active – button LED on
pending – button LED flashing
The Step-in master uses this command to get the actual status and identify if the device is in pending Step-in request.
In reply to the Step-in request, the Step-in master updates the button status by sending set to activate and configures the Step-in action. Other Step-in clients are set to mute.

K-Config Example

Set the step-in button to active:
"#BTN 1,1",0x0D

STEPIN-CP?

Command Name		Permission	Transparency
Set:	-	-	-
Get:	**STEPIN-CP?**	End User	Public
Description		**Syntax**	
Set:	-	-	
Get:	Get module Step-in capabilities	#**STEPIN-CP?**CR	

Response

~nn@**STEPIN-CP**SPcapabilities,num_of_inputs,num_of_cntl_btnCR LF

Parameters

capabilities – 1 (module supports Step-in), 0 (module doesn't support Step-in)
num_of_inputs – 3
num_of_cntl_btn – 3
type – video port type: 2 (HDMI), 3 (DisplayPort), 6 (VGA)

Notes

If a module does not support step-in it might respond with an error "command not supported".

K-Config Example

Get step-in capabilities:
"#STEPIN-CP?",0x0D

System Commands

Command	Description
HDCP-MOD	Set/get HDCP mode

HDCP-MOD

Functions		Permission	Transparency
Set:	**HDCP-MOD**	Administrator	Public
Get	**HDCP-MOD?**	End User	Public
Description		**Syntax**	
Set:	Set HDCP mode	#**HDCP-MOD**SPstage,stage_id,modeCR	
Get:	Get HDCP mode	#**HDCP-MOD?**SPstage,stage_idCR	

Response

Set/get: ~nn@**HDCP-MOD**SP*stage,stage_id*CR LF

Parameters

stage – 0 (In), 1 (Out)
stage_id – For input: 0 (DP), 1 (HDMI), 2 (PC); for output: 1 (HDBaseT)
mode – Status for input: 0 (Off), 1 (On) status for output: 2 (Follow In), 3 (Follow Out)

Response Triggers

Response is sent to the com port from which the Set (before execution) / Get command was received
Response is sent to all com ports after execution if HDCP-MOD was set by any other external control device (button press, device menu and similar) or HDCP mode changed.

Notes

Set HDCP working mode on the device input:

- HDCP supported – HDCP_ON (default)
- HDCP not supported – HDCP OFF

HDCP supports changes following a detected sink - MIRROR OUTPUT

K-Config Example

Set the DP input HDCP off:
"#HDCP-MOD 0,0,0",0x0D

Video Commands

Command	Description
VID-RES	Set/get ADC (VGA) sampling phase
VFRZ	Set/get the freeze on output
IMAGE-PROP	Set/get the image size
SCLR-PCAUTO	Set PC auto sync of scaler

VID-RES

Command Name		Permission	Transparency
Set:	**VID-RES**	End User	Public
Get:	**VID-RES?**	End User	Video
Description		**Syntax**	
Set:	Set video resolution	#**VID-RES**SPstage,stage_id,is_native,resolutionCR	
Get:	Get video resolution	#**VID-RES?**SPstage,stage_id,is_nativeCR	

Response

~nn@**VID-RES**SPstage,stage_id,is_native,resolutionCR LF

Parameters

stage – 0 (Input), 1 (Output)
stage_id – 1 (Scaler)
is_native – 0 (Off), 1 (On)
resolution – Select video resolutions: 0-28 (see Output Resolutions Key on page 32)

Response triggers

- After execution, response is sent to the com port from which the **Set /Get** was received
- After execution, response is sent to all com ports if **VID-RES** was set by any other external control device (button press, device menu and similar)

Notes

1. The "Set" command is only applicable when stage = 1 (Output)
2. The "Set" command with is_native = 1 (On), sets the native resolution on the selected output (resolution index sent = 0). The device sends as an answer the actual VIC ID of native resolution.
3. The "Get" command with is_native = 1 (On) returns the native resolution VIC; when is_native = 1 (Off), it returns the current resolution

K-Config Example

Set video resolution on output to 1400x1050@60Hz:
"#VID-RES 1,1,0,50",0x0D

VFRZ

Command Name		Permission	Transparency
Set:	**VFRZ**	End User	-
Get:	**VFRZ?**	End User	Video
Description		**Syntax**	
Set:	Set freeze video on output	#**VFRZ**SPout_id,freeze_flagCR	
Get:	Get freeze on output status	#**VFRZ?**SPout_idCR	

Response

Set / Get: ~nn@**VFRZ**SPout_id,freeze_flagCR LF

Parameters

Out_id – 1 (Scaler)
Freeze_flag – freeze status: 0 (Off), 1 (On)

K-Config Example

Set video freeze off:
"#VFRZ 1,0",0x0D

IMAGE PROP

Command Name		Permission	Transparency
Set:	**IMAGE-PROP**	End User	Public
Get:	**IMAGE-PROP?**	End User	Video
Description		**Syntax**	
Set:	Set video resolution	#**IMAGE-PROP**SP P1,p2CR	
Get:	Get video resolution	#**IMAGE-PROP?**SP P1CR	

Response

Set / Get: ~nn@IMAGE-PROPSP P1,P2…CR LF

Parameters

P1 – 1 (Scaler)
P2 – Image size: 0 (Over Scan), 1 (Full), 2 (Best Fit), 3 (Pan Scan), 4 (Letter Box), 5 (Under Scan), 6 (Follow In)

Response triggers

Response is sent to the com port from which the **Set** (before execution) **/ Get** command was received.
After execution, response is sent to all com ports if CMD-NAME was set any other external control device (button press, device menu and similar) or genlock status was changed.

Notes

Sets the image properties of the selected scaler

K-Config Example

Set the image size to Pan Scan:
"#IMAGE-PROP 1,3",0x0D

SCLR-PCAUTO

Command Name		Permission	Transparency
Set:	**SCLR-PCAUTO**	End User	Public
Get:		End User	Video
Description		**Syntax**	
Set:	Set PC auto sync of scaler	#**SCLR-PCAUTO**SP P1,P2CR	
Get:			

Response

~nn@**SCLR-PCAUTO**SP P1,P2…CR LF

Parameters

P1 – 1 (Scaler)
P2 – 1 (Yes)

Response triggers

Response is sent to the com port from which the Set (before execution) / Get command was received.
After execution, response is sent to all com ports if CMD-NAME was set any other external control device (button press, device menu and similar) or genlock status was changed.

Notes

Trigger the Auto Adjust feature of PC input

K-Config Example

Set the PC auto sync of the scaler to yes:
"#SCLR-PCAUTO 1,1",0x0D

Switching/Routing Commands

Command	Description
ROUTE	Set/get layer routing
MENU-CMD	Set menu navigation

ROUTE

Command Name		Permission	Transparency
Set:	**ROUTE**	End User	-
Get:	**ROUTE?**	End User	Switching
Description		**Syntax**	
Set:	Set layer routing	**#ROUTE**SPP1,P2,P3CR	
Get:	Get layer routing	**#ROUTE?**SPP1,P2CR	
Response			
~nn@**ROUTE**SPP1,P2,P3CR LF			
Parameters			
P1 – Layer number: 12 (Video+Audio) P2 – 1 (Scaler) P3 – Video inputs: 0 (DP), 1 (HDMI), 2 (PC)			
Notes			
This command replaces all other routing commands.			
K-Config Example			
Select the PC input to route to the output: "#ROUTE 12,1,2",0x0D			

MENU-CMD

Command Name		Permission	Transparency
Set:	**MENU-CMD**	End User	Public
Get:		End User	
Description		**Syntax**	
Set:	Set menu navigation	#**MENU-CMD**SPparamCR	
Get:			
Response			
~nn@**MENU_CMD**SPparamCR LF			
Parameters			
Param –1 (Menu), 2 (Enter), 6 (Right), 7 (Left)			
Notes			
This command emulates menu navigation.			
K-Config Example			
Select menu: "#MENU-CMD 1",0x0D			

Audio Commands

Command	Description
AUD-EMB	Set/get audio in video embedding status
SCLR-AS	Set/get the auto sync off timer
SCLR-AUDIO-DELAY	Set/get the scaler audio delay

AUD-EMB

Command Name		Permission	Transparency
Set:	**AUD-EMB**	End User	Public
Get:	**AUD-EMB?**	End User	Public
Description		**Syntax**	
Set:	Set audio in video embedding status	#**AUD-EMB**SPin,out,statusCR	
Get:	Get audio in video embedding status	#**AUD-EMB?**SPin,outCR	

Response

Set / Get: ~nn@**AUD-EMB**SPin,out,statusCR LF

Parameters

in – audio input to be embedded: 0 (DP), 1 (HDMI), 2 (PC)
out – 0 (Output)
status – embedding status: 0 (Analog), 1 (Embedded), 2 (Automatic)

Response triggers

Response is sent to the com port from which the Set (before execution)/Get command was received.

- After execution, response is sent to all com ports if AUD-EMB was set by any other external control device (button press, device menu and similar)

K-Config Example

Embed HDMI input audio:
"#AUD-EMB 1,0,1",0x0D

Scaler-As

Command Name		Permission	Transparency
Set:	**SCLR-AS**	End User	Public
Get:	**SCLR-AS?**	End User	Audio
Description		**Syntax**	
Set:	Set the auto sync off timer	#SCLR-ASSPP1,P2CR	
Get:	Get the auto sync off timer definition	#SCLR-AS?SPP1CR	

Response

Set / Get: ~nn@SCLR-ASSPP1,P2CR LF

Parameters

P1 – Scaler=1
P2 – for setting the auto sync timer: Disable=0, Fast=1, Slow=2

Response triggers

The auto-sync feature determines whether the outputs are turned off when no video is detected on the selected input

Notes

Sets the Auto Sync features for the selected Scaler.

K-Config Example

Set the auto sync off timer to slow:
"#SCLR-AS 1,2",0x0D

Scaler Audio Delay

Command Name		Permission	Transparency
Set:	**SCLR-AUDIO-DELAY**	End User	Public
Get:	**SCLR-AUDIO-DELAY?**	End User	Audio
Description		**Syntax**	
Set:	Set the scaler audio delay	#**SCLR-AUDIO-DELAY**SPP1,P2CR	
Get:	Get the scaler audio delay	#**SCLR-AUDIO-DELAY?**SPP1CR	

Response

Set / Get: ~nn@**SCLR-AUDIO-DELAY**SPP1,P2CR LF

Parameters

P1 – 1 (Scaler)

P2 – for setting the audio delay: 0 (Off), 1 (40ms), 2 (50ms), …, 17 (200ms) in 10ms steps

Response triggers

Response is sent to the com port from which the Set (before execution) / Get command was received.
After execution, response is sent to all com ports if CMD-NAME was set any other external control device (button press, device menu and similar) or genlock status was changed.

Notes

Sets the audio delay for the selected audio output

K-Config Example

Set the scaler audio delay to 40ms:
"#SCLR-AUDIO-DELAY 1,1",0x0D

Output Resolutions Key

#	Resolution	#	Resolution	#	Resolution
0	Native	10	1400x1050 60	20	1920x1080P 25
1	640x480 60	11	1680x1050 60	21	1920x1080P 30
2	800x600 60	12	1600x1200 60	22	1920x1080P 50
3	1024x768 60	13	1920x1080 60	23	1920x1080P 60
4	1280x768 60	14	1920x1200 60	24	4K2K 24
5	1360x768 60	15	720x480P 60	25	4K2K 25
6	1280x720 60	16	720x576P 50	26	4K2K 30
7	1280x800 60	17	1280x720P 60	27	4K2K(4:2:0) 50
8	1280x1024 60	18	1280x720P 50	28	4K2K(4:2:0) 60
9	1440x900 60	19	1920x1080P 24		

The warranty obligations of Kramer Electronics Inc. ("Kramer Electronics") for this product are limited to the terms set forth below:

What is Covered

This limited warranty covers defects in materials and workmanship in this product.

What is Not Covered

This limited warranty does not cover any damage, deterioration or malfunction resulting from any alteration, modification, improper or unreasonable use or maintenance, misuse, abuse, accident, neglect, exposure to excess moisture, fire, improper packing and shipping (such claims must be presented to the carrier), lightning, power surges, or other acts of nature. This limited warranty does not cover any damage, deterioration or malfunction resulting from the installation or removal of this product from any installation, any unauthorized tampering with this product, any repairs attempted by anyone unauthorized by Kramer Electronics to make such repairs, or any other cause which does not relate directly to a defect in materials and/or workmanship of this product. This limited warranty does not cover cartons, equipment enclosures, cables or accessories used in conjunction with this product.

Without limiting any other exclusion herein, Kramer Electronics does not warrant that the product covered hereby, including, without limitation, the technology and/or integrated circuit(s) included in the product, will not become obsolete or that such items are or will remain compatible with any other product or technology with which the product may be used.

How Long this Coverage Lasts

The standard limited warranty for Kramer products is seven (7) years from the date of original purchase, with the following exceptions:

1. All Kramer VIA hardware products are covered by a standard three (3) year warranty for the VIA hardware and a standard three (3) year warranty for firmware and software updates.
2. All Kramer fiber optic cables and adapters, active cables, cable retractors, all Kramer speakers and Kramer touch panels are covered by a standard one (1) year warranty.
3. All Kramer Cobra products, all Kramer Calibre products, all Kramer Minicom digital signage products, all HighSecLabs products, all streaming, and all wireless products are covered by a standard three (3) year warranty.
4. All Sierra Video MultiViewers are covered by a standard five (5) year warranty.
5. Sierra switchers & control panels are covered by a standard seven (7) year warranty (excluding power supplies and fans that are covered for three (3) years).
6. K-Touch software is covered by a standard one (1) year warranty for software updates.
7. All Kramer passive cables are covered by a ten (10) year warranty.

Who is Covered

Only the original purchaser of this product is covered under this limited warranty. This limited warranty is not transferable to subsequent purchasers or owners of this product.

What Kramer Electronics Will Do

Kramer Electronics will, at its sole option, provide one of the following three remedies to whatever extent it shall deem necessary to satisfy a proper claim under this limited warranty:

1. Elect to repair or facilitate the repair of any defective parts within a reasonable period of time, free of any charge for the necessary parts and labor to complete the repair and restore this product to its proper operating condition. Kramer Electronics will also pay the shipping costs necessary to return this product once the repair is complete.
2. Replace this product with a direct replacement or with a similar product deemed by Kramer Electronics to perform substantially the same function as the original product.
3. Issue a refund of the original purchase price less depreciation to be determined based on the age of the product at the time remedy is sought under this limited warranty.

What Kramer Electronics Will Not Do Under This Limited Warranty

If this product is returned to Kramer Electronics or the authorized dealer from which it was purchased or any other party authorized to repair Kramer Electronics products, this product must be insured during shipment, with the insurance and shipping charges prepaid by you. If this product is returned uninsured, you assume all risks of loss or damage during shipment. Kramer Electronics will not be responsible for any costs related to the removal or re-installation of this product from or into any installation. Kramer Electronics will not be responsible for any costs related to any setting up this product, any adjustment of user controls or any programming required for a specific installation of this product.

How to Obtain a Remedy Under This Limited Warranty

To obtain a remedy under this limited warranty, you must contact either the authorized Kramer Electronics reseller from whom you purchased this product or the Kramer Electronics office nearest you. For a list of authorized Kramer Electronics resellers and/or Kramer Electronics authorized service providers, visit our web site at www.kramerav.com or contact the Kramer Electronics office nearest you.

In order to pursue any remedy under this limited warranty, you must possess an original, dated receipt as proof of purchase from an authorized Kramer Electronics reseller. If this product is returned under this limited warranty, a return authorization number, obtained from Kramer Electronics, will be required (RMA number). You may also be directed to an authorized reseller or a person authorized by Kramer Electronics to repair the product.

If it is decided that this product should be returned directly to Kramer Electronics, this product should be properly packed, preferably in the original carton, for shipping. Cartons not bearing a return authorization number will be refused.

Limitation of Liability

THE MAXIMUM LIABILITY OF KRAMER ELECTRONICS UNDER THIS LIMITED WARRANTY SHALL NOT EXCEED THE ACTUAL PURCHASE PRICE PAID FOR THE PRODUCT. TO THE MAXIMUM EXTENT PERMITTED BY LAW, KRAMER ELECTRONICS IS NOT RESPONSIBLE FOR DIRECT, SPECIAL, INCIDENTAL OR CONSEQUENTIAL DAMAGES RESULTING FROM ANY BREACH OF WARRANTY OR CONDITION, OR UNDER ANY OTHER LEGAL THEORY. Some countries, districts or states do not allow the exclusion or limitation of relief, special, incidental, consequential or indirect damages, or the limitation of liability to specified amounts, so the above limitations or exclusions may not apply to you.

Exclusive Remedy

TO THE MAXIMUM EXTENT PERMITTED BY LAW, THIS LIMITED WARRANTY AND THE REMEDIES SET FORTH ABOVE ARE EXCLUSIVE AND IN LIEU OF ALL OTHER WARRANTIES, REMEDIES AND CONDITIONS, WHETHER ORAL OR WRITTEN, EXPRESS OR IMPLIED. TO THE MAXIMUM EXTENT PERMITTED BY LAW, KRAMER ELECTRONICS SPECIFICALLY DISCLAIMS ANY AND ALL IMPLIED WARRANTIES, INCLUDING, WITHOUT LIMITATION, WARRANTIES OF MERCHANTABILITY AND FITNESS FOR A PARTICULAR PURPOSE. IF KRAMER ELECTRONICS CANNOT LAWFULLY DISCLAIM OR EXCLUDE IMPLIED WARRANTIES UNDER APPLICABLE LAW, THEN ALL IMPLIED WARRANTIES COVERING THIS PRODUCT, INCLUDING WARRANTIES OF MERCHANTABILITY AND FITNESS FOR A PARTICULAR PURPOSE, SHALL APPLY TO THIS PRODUCT AS PROVIDED UNDER APPICABLE LAW.

IF ANY PRODUCT TO WHICH THIS LIMITED WARRANTY APPLIES IS A "CONSUMER PRODUCT" UNDER THE MAGNUSON-MOSS WARRANTY ACT (15 U.S.C.A. §2301, ET SEQ.) OR OTHER APPICABLE LAW, THE FOREGOING DISCLAIMER OF IMPLIED WARRANTIES SHALL NOT APPLY TO YOU, AND ALL IMPLIED WARRANTIES ON THIS PRODUCT, INCLUDING WARRANTIES OF MERCHANTABILITY AND FITNESS FOR THE PARTICULAR PURPOSE, SHALL APPLY AS PROVIDED UNDER APPLICABLE LAW.

Other Conditions

This limited warranty gives you specific legal rights, and you may have other rights which vary from country to country or state to state.

This limited warranty is void if (i) the label bearing the serial number of this product has been removed or defaced, (ii) the product is not distributed by Kramer Electronics or (iii) this product is not purchased from an authorized Kramer Electronics reseller. If you are unsure whether a reseller is an authorized Kramer Electronics reseller, visit our web site at www.kramerav.com or contact a Kramer Electronics office from the list at the end of this document.

Your rights under this limited warranty are not diminished if you do not complete and return the product registration form or complete and submit the online product registration form. Kramer Electronics thanks you for purchasing a Kramer Electronics product. We hope it will give you years of satisfaction.

KRAMER

P/N: 2900- 300855 Rev: 2

SAFETY WARNING

Disconnect the unit from the power supply before opening and servicing

For the latest information on our products and a list of Kramer distributors, visit our Web site where updates to this user manual may be found.

We welcome your questions, comments, and feedback.

www.KramerAV.com
info@KramerAV.com